TRAFFIC/RAILWAY LAMPS

High Voltage Incandescent Lamps

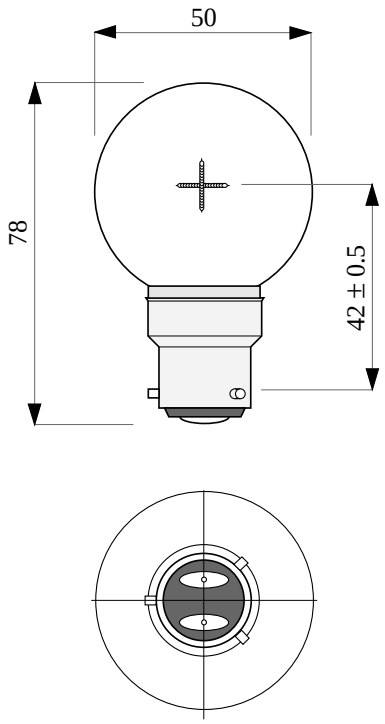

Fig. 11-21

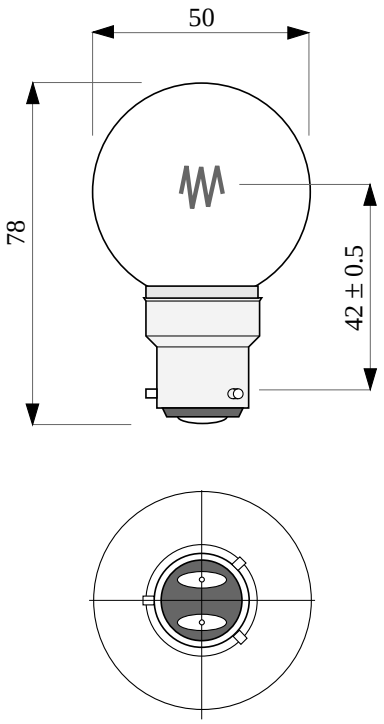

Fig. 11-22

Article	Volt	Watt	Lumen	LcL	Life Hrs	Base	Finish	Int. Code	Fig.
306842361	12	24/24	260	42 ±0.5	1000	Ba22d-3	Clear	S.L. 35	11-21
306842454	110	25	122	42 ±0.5	1000	Ba22d-3	Clear	S.L. 33	11-22

For other specifications please contact our office for more information.